IPC-B120HA-LDF/W(B)
2 MP Smart Hybrid Light Fixed Bullet Network Camera





- Support Wi-Fi 6
- Good night-time performance with up to 30 m IR and 30 m white light
- Built-in microphone and speaker, support two-way audio
- Support Human and Vehicle Detection
- Water and dust resistant IP66

▪ Specification

Camera	
Image Sensor	1/3" Progressive Scan CMOS
Max. Resolution	1920 × 1080
Min. Illumination	Color: 0.01 Lux @ (F2.0, AGC ON),B/W: 0 Lux with IR
Shutter Time	1/3 s to 1/100,000 s
Day & Night	IR cut filter
Angle Adjustment	Pan: 0° to 360°, tilt: 0° to 90°, rotate: 0° to 360°
Lens	
Lens Type	Fixed focal lens, 2.8, 4, and 6 mm optional
Focal Length & FOV	2.8 mm, horizontal FOV 101°, vertical FOV 56°, diagonal FOV 118° 4 mm, horizontal FOV 78°, vertical FOV 42°, diagonal FOV 92° 6 mm, horizontal FOV 49°, vertical FOV 28°, diagonal FOV 56°
Aperture	F2.0
Lens Mount	M12
Iris Type	Fixed
Depth of Field	2.8 mm: 0.8 m~∞ 4 mm: 1.1 m~∞ 6 mm: 2.3 m~∞
DORI	
DORI	2.8 mm, D: 43 m, O: 17 m, R: 8 m, I: 4 m 4 mm, D: 59 m, O: 23 m, R: 11 m, I: 5 m 6 mm, D: 86 m, O: 34 m, R: 17 m, I: 8 m
Illuminator	
Supplement Light Type	IR, White Light
IR Wavelength	850 nm
Supplement Light Range	Up to 30 m
Smart Supplement Light	Yes
Video	
Main Stream	50 Hz: 25 fps (1920 × 1080, 1280 × 720, 768 x 432) 60 Hz: 30 fps (1920 × 1080, 1280 × 720, 768 x 432)
Sub-Stream	50 Hz: 25 fps (768 × 432) 60 Hz: 30 fps (768 × 432)
Video Compression	Main stream: H.265/H.264, Sub-stream: H.265/H.264/MJPEG
Video Bit Rate	32 Kbps to 8 Mbps
H.264 Type	Baseline Profile,Main Profile,High Profile
H.265 Type	Main Profile
Bit Rate Control	CBR,VBR
Region of Interest (ROI)	1 fixed region for main stream
Audio	
Audio Type	Mono sound
Audio Compression	G.711(ulaw)/ (AAC-LC)
Audio Bit Rate	64 Kbps (G.711ulaw)/16 to 64 Kbps (AAC-LC)
Audio Sampling Rate	8 kHz/16 kHz
Environment Noise Filtering	Yes

Network	
Security	Password protection, complicated password, watermark, basic and digest authentication for HTTP, WSSE and digest authentication for Open Network Video Interface, security audit log, host authentication (MAC address)
Simultaneous Live View	Up to 6 channels
API	ONVIF (Profile S, Profile G, Profile T), ISAPI, SDK
Protocols	TCP/IP, ICMP, DHCP, DNS, HTTP, RTP, RTCP, RTSP, NTP, IGMP, IPv4, IPv6, UDP, QoS, UPnP
User/Host	Up to 32 users 3 user levels: administrator, operator, and user
Client	Wired network: HiLookVision, iVMS-4200 Wi-Fi: iVMS-4200 *Wi-Fi connection with HiLookVision directly is not possible
Web Browser	Local service: IE 11, Chrome 57.0+, Firefox 52.0+, Edge 89+
Wi-Fi	
Wi-Fi Protocol	IEEE802.11b,IEEE802.11g,IEEE802.11n,IEEE802.11ax
Frequency Range	2.4 GHz to 2.4835 GHz
Channel Bandwidth	20/40 MHz
Modulation	802.11b: CCK, QPSK, BPSK, 802.11g: QPSK, BPSK,16QAM, 64QAM, 802.11n: QPSK, BPSK,16QAM, 64QAM, 802.11ax: QPSK, BPSK,16QAM, 64QAM, 256QAM
Transfer Rate	802.11b: up to 11 Mbps, 802.11g: up to 54 Mbps, 802.11n: up to 150 Mbps, 802.11ax: up to 114 Mbps
Image	
Wide Dynamic Range (WDR)	Digital WDR
SNR	≥ 52 dB
Day/Night Switch	Day, Night, Auto, Schedule
Image Enhancement	BLC, HLC, 3D DNR
Image Settings	Saturation, brightness, contrast, sharpness, gain, white balance, adjustable by client software or web browser
Privacy Mask	4 programmable polygon privacy masks
Interface	
Built-in Microphone	Yes
Reset Key	Yes
Ethernet Interface	1 RJ45 10 M/100 M self-adaptive Ethernet port
Event	
Basic Event	Motion detection (support alarm triggering by specified target types (human and vehicle)),exception
Linkage	Notify surveillance center, send email, trigger recording, trigger capture, audible warning
General	
Power	12 VDC ± 25%, 0.55 A, max. 6.5 W,Ø5.5 mm coaxial power plug,reverse polarity protection,A switching adapter is included in the package.

Material	Plastic
Dimension	260.9 mm × 113.9 mm × 67.4 mm (10.3" × 4.5" × 2.7")
Package Dimension	300 mm × 130 mm × 100 mm (10.2" × 5.1" × 4.9")
Weight	Approx. 310 g (0.68 lb.)
With Package Weight	Approx. 550 g (1.21 lb.)
Storage Conditions	-30 °C to 60 °C (-22 °F to 140 °F). Humidity 95% or less (non-condensing)
Startup and Operating Conditions	-30 °C to 60 °C (-22 °F to 140 °F). Humidity 95% or less (non-condensing)
Language	English, Ukrainian
General Function	Heartbeat, anti-banding, mirror, password protection
Approval	
EMC	CE-EMC: EN 55032: 2015, EN 61000-3-2:2019, EN 61000-3-3: 2013+A1:2019, EN 50130-4: 2011 +A1: 2014
RF	CE-RED: EN 301489-1 V2.1.1(BT or 2.4G); EN 301489-17 V3.1.1 (BT or 2.4G); EN 300328 V2.1.1 (BT or 2.4G); EN 62311:2008 (BT or 2.4G)
Safety	CB: IEC 62368-1: 2014+A11, CE-LVD: EN 62368-1: 2014/A11: 2017
Environment	CE-RoHS: 2011/65/EU, WEEE: 2012/19/EU, Reach: Regulation (EC) No 1907/2006
Protection	IP66: IEC 60529-2013

▪ Typical Application

Hikvision products are classified into three levels according to their anti-corrosion performance. Refer to the following description to choose for your using environment.

This model has NO SPECIFIC PROTECTION.

Level	Description
Top-level protection	Hikvision products at this level are equipped for use in areas where professional anti-corrosion protection is a must. Typical application scenarios include coastlines, docks, chemical plants, and more.
Moderate protection	Hikvision products at this level are equipped for use in areas with moderate anti-corrosion demands. Typical application scenarios include coastal areas about 2 kilometers (1.24 miles) away from coastlines, as well as areas affected by acid rain.
No specific protection	Hikvision products at this level are equipped for use in areas where no specific anti-corrosion protection is needed.

▪ Available Model

IPC-B120HA-LDF/W(2.8mm)(B)/HiLookSTD

IPC-B120HA-LDF/W(4mm)(B)

IPC-B120HA-LDF/W(6mm)(B)

IPC-B120HA-LDF/W(2.8mm)(B)

IPC-B120HA-LDF/W(2.8mm)(HIK POLAND)KIT

▪ Dimension

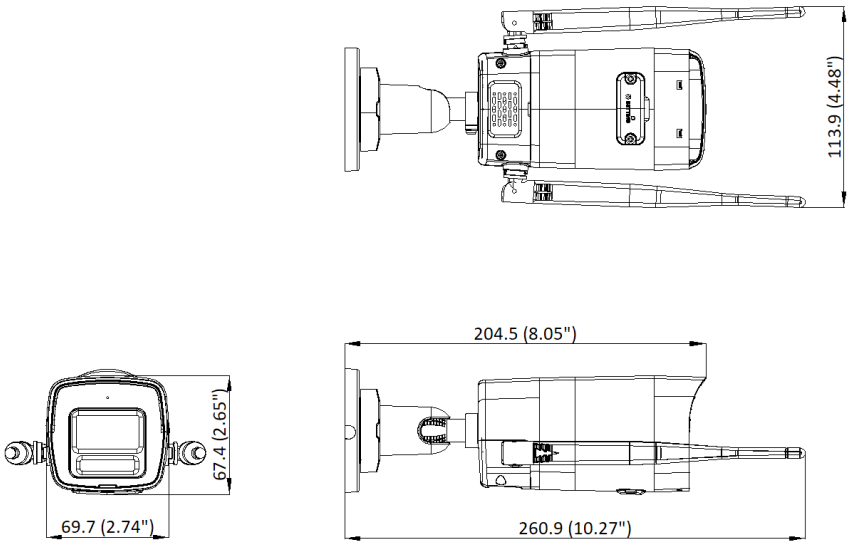

Unit: mm (inch)

▪ Accessory

▪ Optional

DS-1276ZJ-SUS	DS-1275ZJ-SUS	DS-1280ZJ-XS
		

▪ Installation Methods

Corner Mounting DS-1276ZJ-SUS+DS-1280ZJ-XS	Vertical Pole Mounting DS-1275ZJ-SUS+DS-1280ZJ-XS	Junction Box DS-1280ZJ-XS
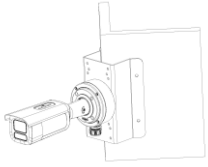	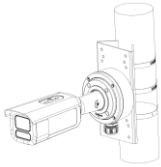	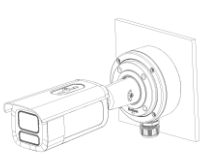

See Far, Go Further

www.hikvision.com
support@hikvision.com

© Hangzhou Hikvision Digital Technology Co., Ltd. Unless otherwise agreed, Hikvision makes no warranties, express or implied. We reserve the right to introduce modifications without notice.

HiLook